REVISION HISTORY				
ZONE	REV	DESCRIPTION	DATE	APPROVED
WORK SURFACE	1	SS WORK SURFACE 40 MM HIGH	1/20/2013	P CH
TOP FRONT	2	CONTROL PANEL LOCATION	7/19/2018	P CH

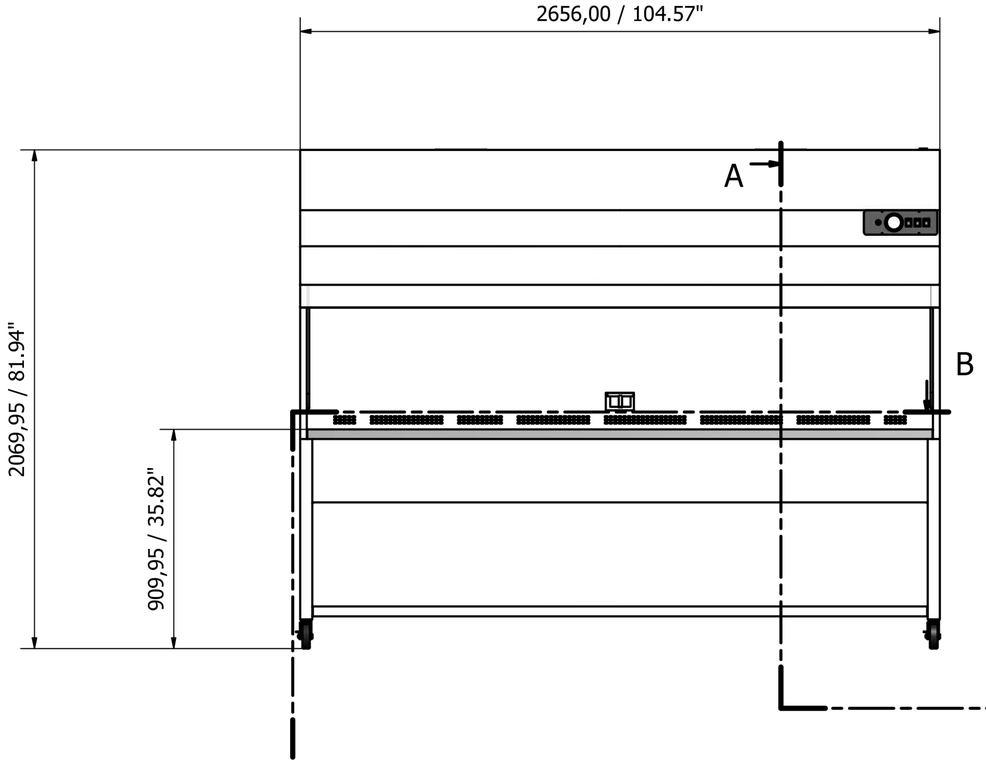

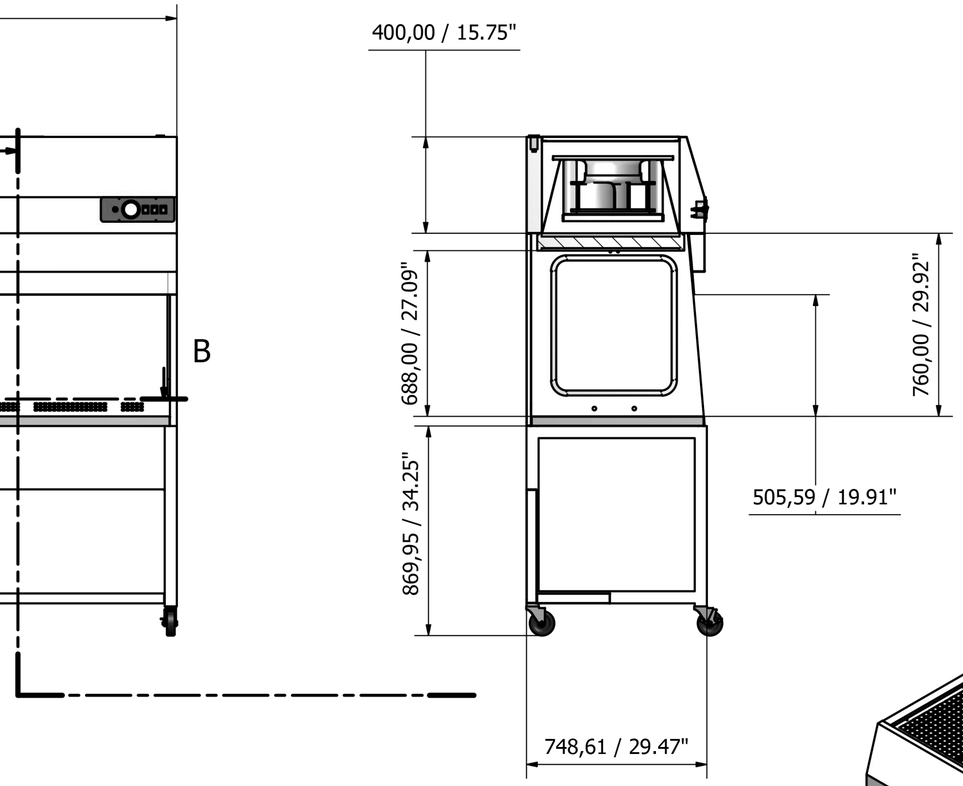

A-A (1 : 18)

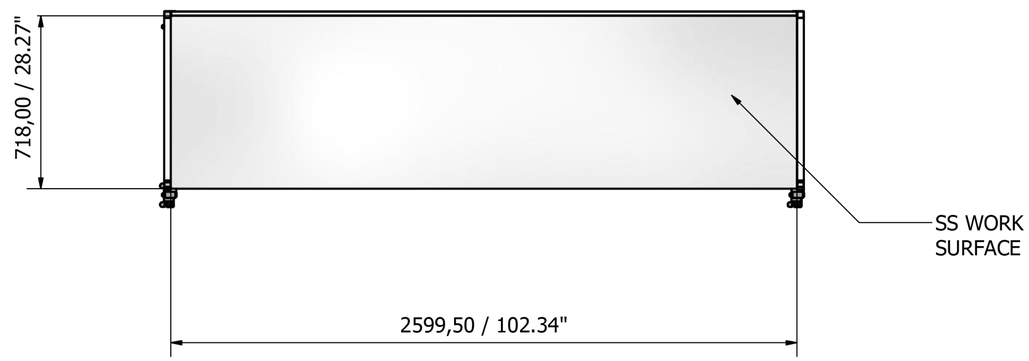

B-B (1 : 18)

NOTES :

1.0 CUSTOMER

2.0 SUBMIT DRAWING FOR APPROVAL.
3.0 STANDARD FEATURES INCLUDED.
3.1 CONSTRUCTION, EPOXY MICROgone ANTIMICROBIAL COATING MILD STEEL.
3.2 STAINLESS STEEL WORK SURFACE .
3.3 SIDES PANELS MADE IN TEMPERED GLASSES.
3.4 CANFIL-FARR ULPA MAIN FILTER.
3.5 INTERNAL LIGHTNING.
3.6 INTERNAL GFCI OUTLET.
3.7 FAN SPEED CONTROL.
3.8 OPTIONAL; BASE STAND OR MOVIL CART.
3.9 CONTROL PANEL: FAN'S ON/OFF, MINIHELIC ULPA PRESSURE GAUGE, GFCI OUTLET, AND LIGHTS SWITCHES.
4.0 EBMPAPST ROTOR BLOWER.
5.0 POWER INLET 120 V 60 HZ.
6.0 OPTIONAL; HANGING BAR WITH "S" HOOKS.
7.0 HEPA FILTERS (2) 1219 X 610 X 66.

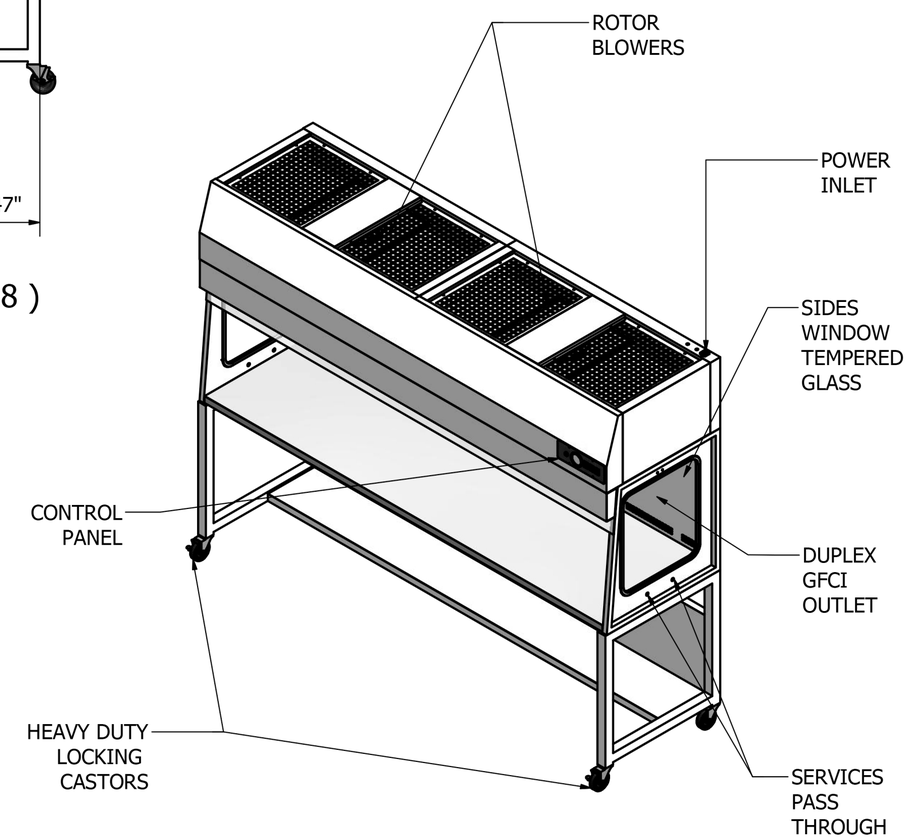

Designed by	Checked by	Approved by	Date	Date	
CFG				2/9/2012	

VLF-96 VERTICAL LAMINAR FLOW

VLF-96.GAssem	Edition	Sheet
	2	1 / 1